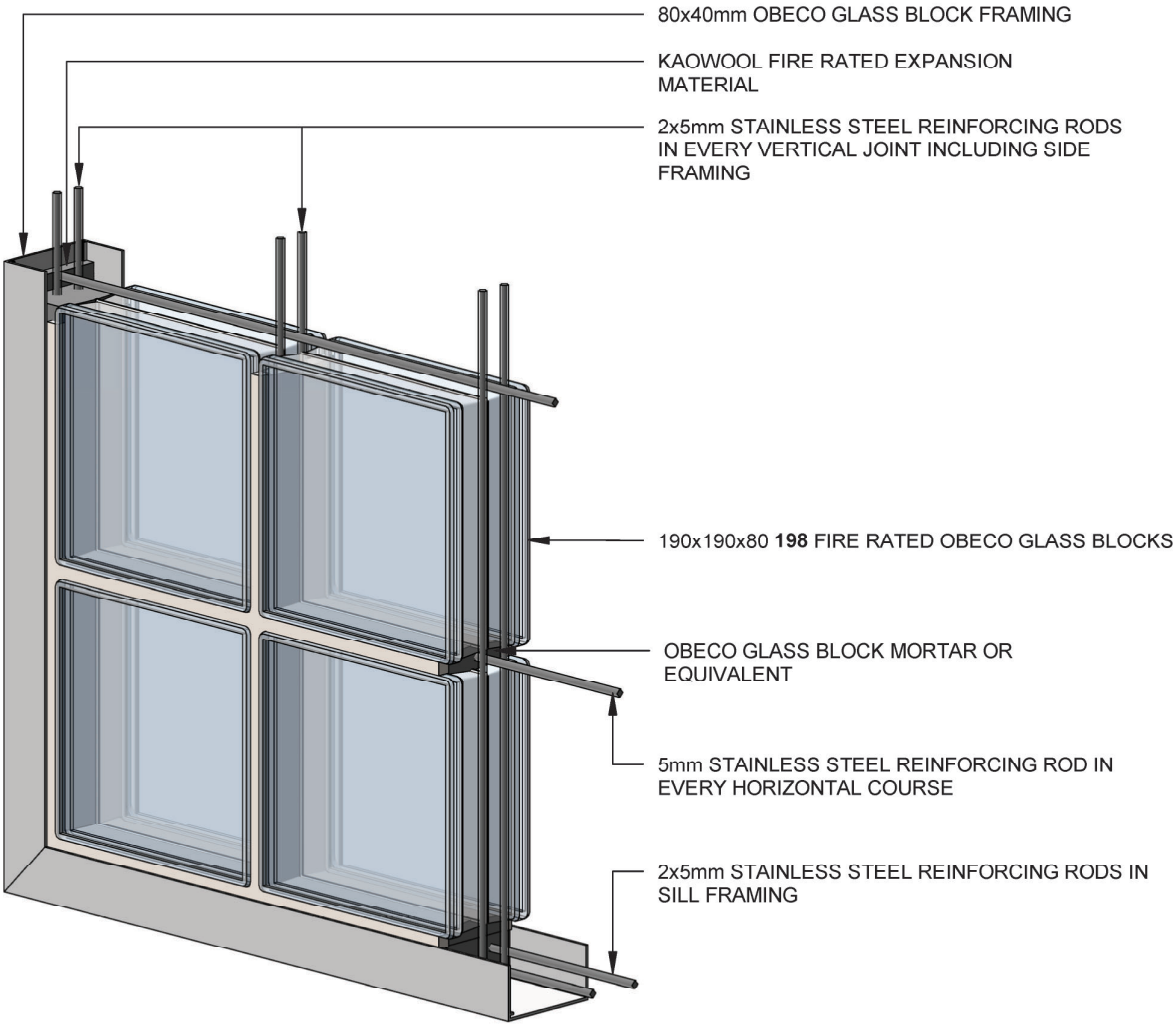
80x40mm OBECO GLASS BLOCK FRAMING
KAOWOOL FIRE RATED EXPANSION MATERIAL
2x5mm STAINLESS STEEL REINFORCING RODS IN EVERY VERTICAL JOINT INCLUDING SIDE FRAMING
190x190x80 **198** FIRE RATED OBECO GLASS BLOCKS
OBECO GLASS BLOCK MORTAR OR EQUIVALENT
5mm STAINLESS STEEL REINFORCING ROD IN EVERY HORIZONTAL COURSE
2x5mm STAINLESS STEEL REINFORCING RODS IN SILL FRAMING

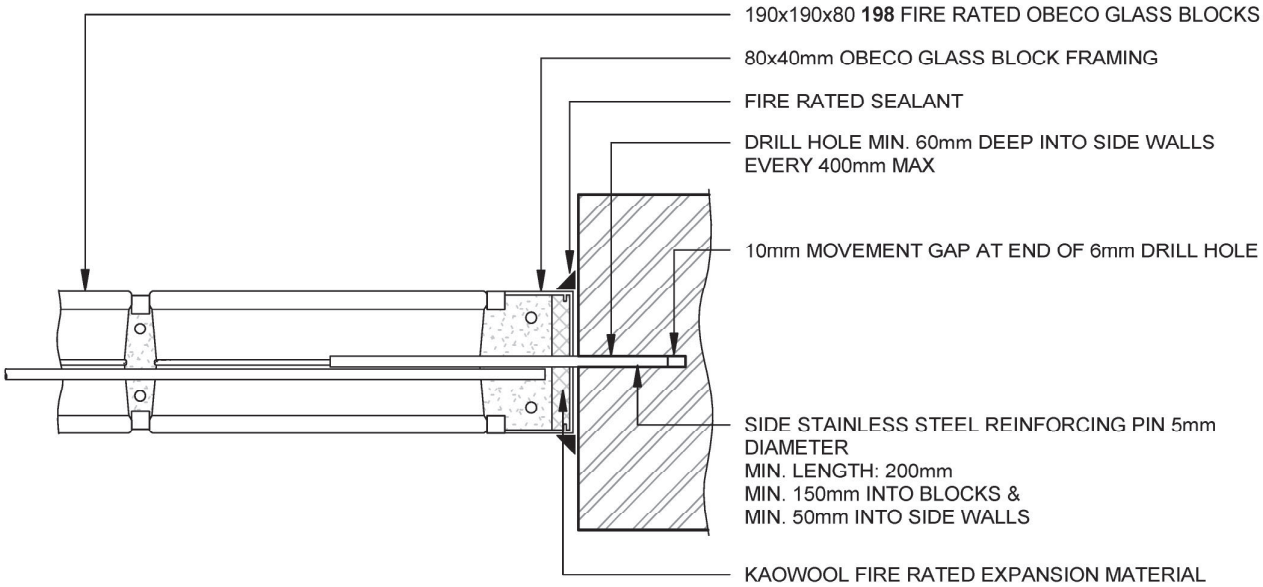
190x190x80 **198** FIRE RATED OBECO GLASS BLOCKS
80x40mm OBECO GLASS BLOCK FRAMING
FIRE RATED SEALANT
DRILL HOLE MIN. 60mm DEEP INTO SIDE WALLS EVERY 400mm MAX
10mm MOVEMENT GAP AT END OF 6mm DRILL HOLE
SIDE STAINLESS STEEL REINFORCING PIN 5mm DIAMETER
MIN. LENGTH: 200mm
MIN. 150mm INTO BLOCKS &
MIN. 50mm INTO SIDE WALLS
KAOWOOL FIRE RATED EXPANSION MATERIAL