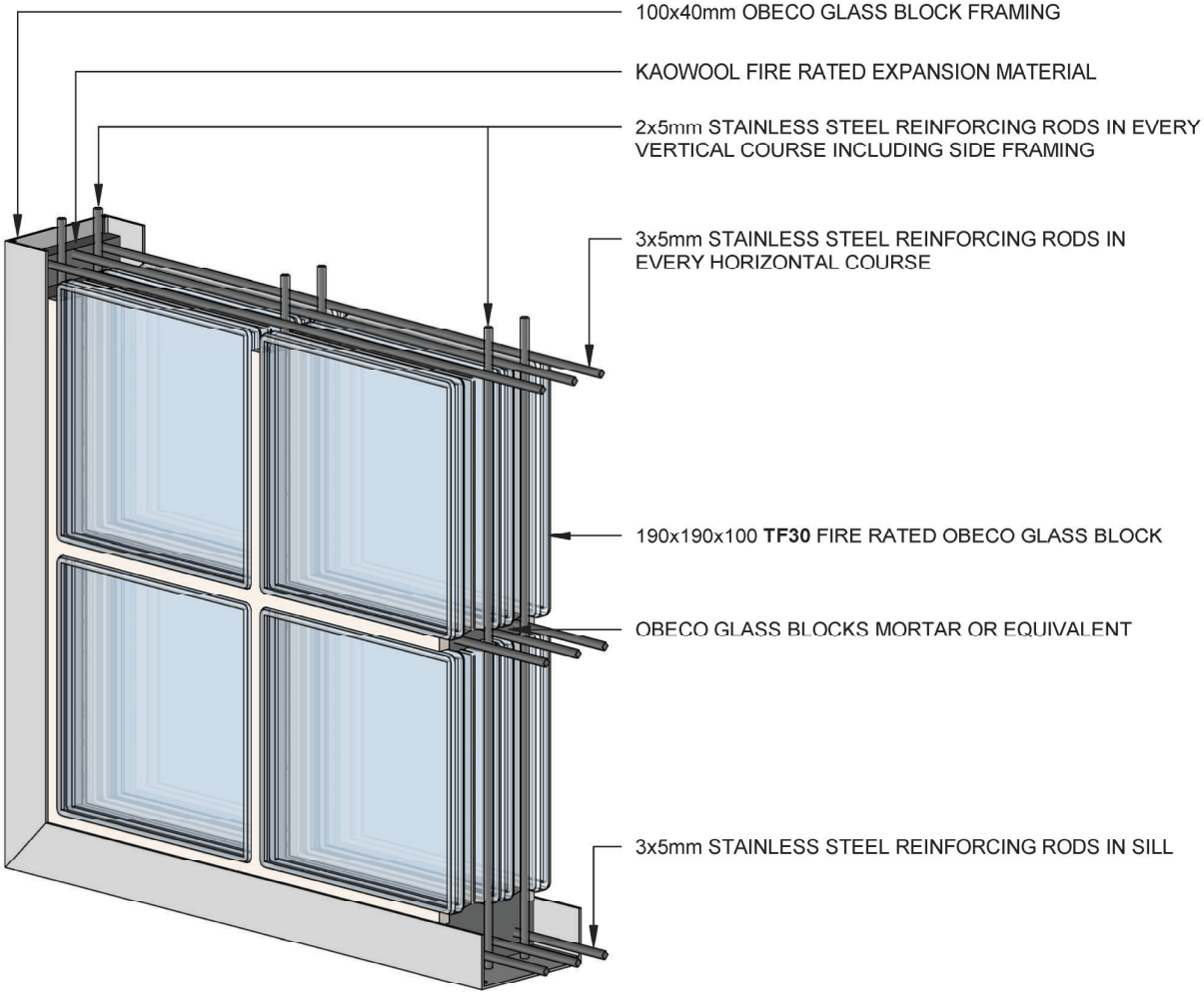
100x40mm OBECO GLASS BLOCK FRAMING
KAOWOOL FIRE RATED EXPANSION MATERIAL
2x5mm STAINLESS STEEL REINFORCING RODS IN EVERY VERTICAL COURSE INCLUDING SIDE FRAMING
3x5mm STAINLESS STEEL REINFORCING RODS IN EVERY HORIZONTAL COURSE
190x190x100 **TF30** FIRE RATED OBECO GLASS BLOCK
OBECO GLASS BLOCKS MORTAR OR EQUIVALENT
3x5mm STAINLESS STEEL REINFORCING RODS IN SILL

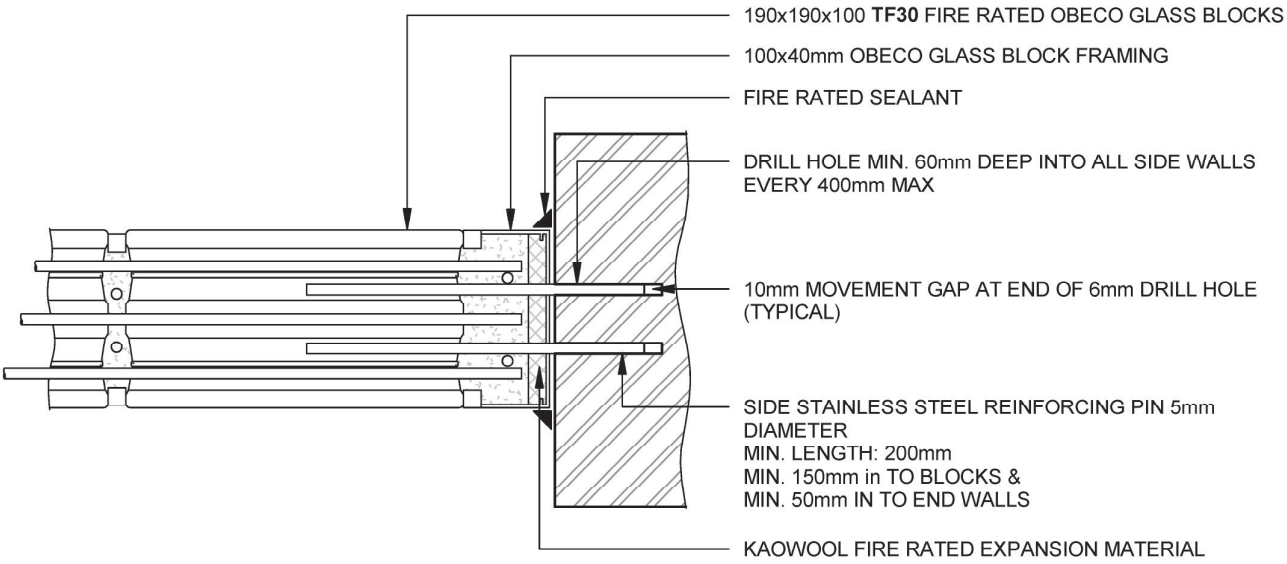
190x190x100 **TF30** FIRE RATED OBECO GLASS BLOCKS
100x40mm OBECO GLASS BLOCK FRAMING
FIRE RATED SEALANT
DRILL HOLE MIN. 60mm DEEP INTO ALL SIDE WALLS EVERY 400mm MAX
10mm MOVEMENT GAP AT END OF 6mm DRILL HOLE (TYPICAL)
SIDE STAINLESS STEEL REINFORCING PIN 5mm DIAMETER
MIN. LENGTH: 200mm
MIN. 150mm in TO BLOCKS &
MIN. 50mm IN TO END WALLS
KAOWOOL FIRE RATED EXPANSION MATERIAL