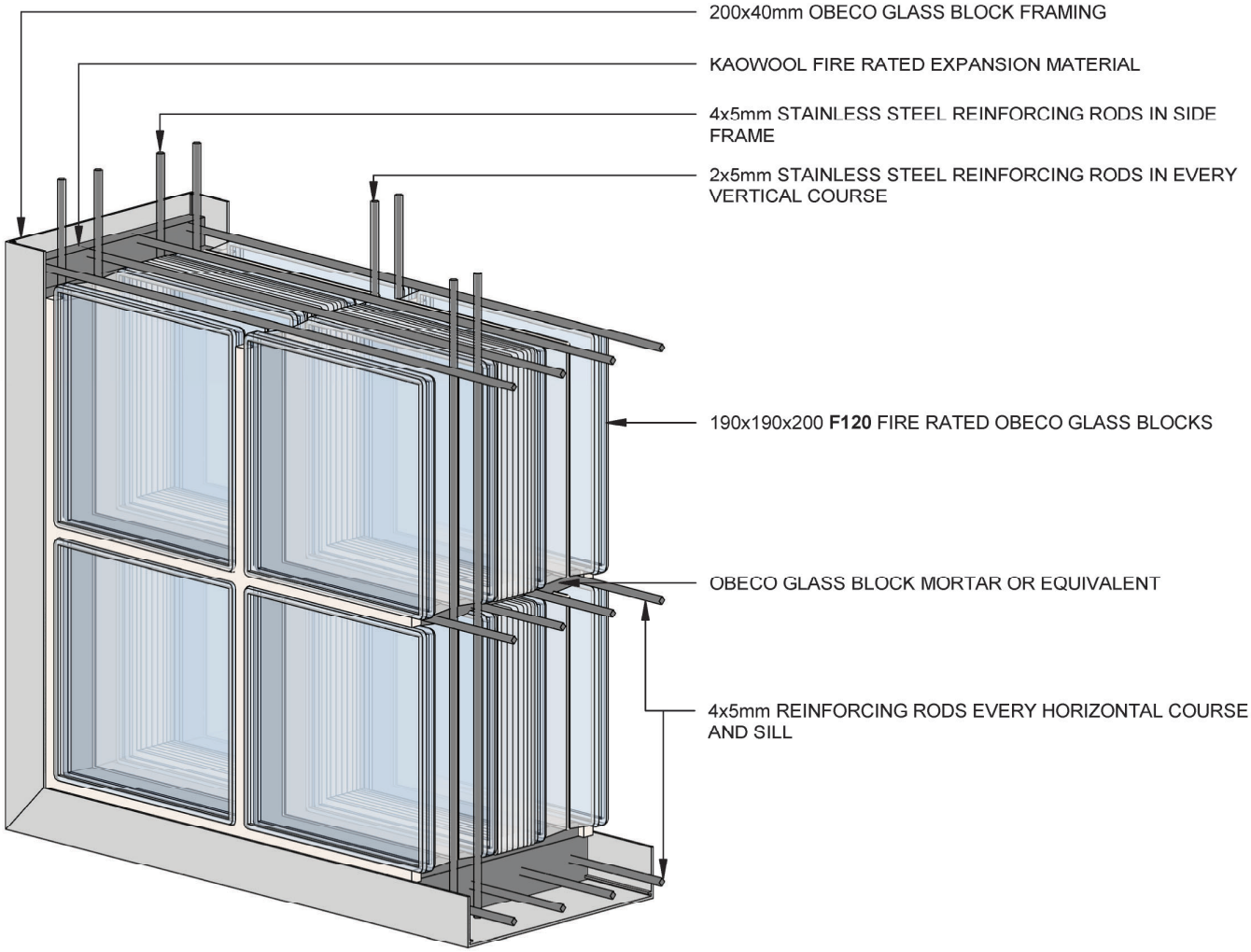
200x40mm OBECO GLASS BLOCK FRAMING
KAOWOOL FIRE RATED EXPANSION MATERIAL
4x5mm STAINLESS STEEL REINFORCING RODS IN SIDE FRAME
2x5mm STAINLESS STEEL REINFORCING RODS IN EVERY VERTICAL COURSE
190x190x200 **F120** FIRE RATED OBECO GLASS BLOCKS
OBECO GLASS BLOCK MORTAR OR EQUIVALENT
4x5mm REINFORCING RODS EVERY HORIZONTAL COURSE AND SILL

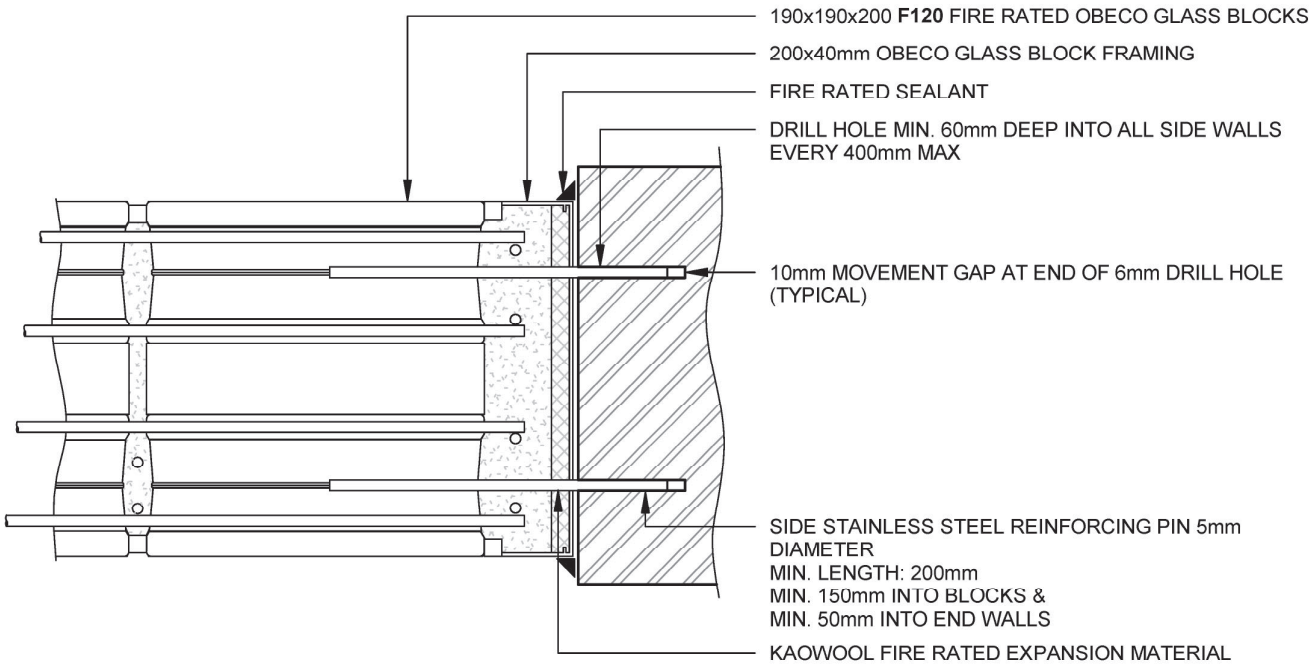
190x190x200 **F120** FIRE RATED OBECO GLASS BLOCKS
200x40mm OBECO GLASS BLOCK FRAMING
FIRE RATED SEALANT
DRILL HOLE MIN. 60mm DEEP INTO ALL SIDE WALLS EVERY 400mm MAX
10mm MOVEMENT GAP AT END OF 6mm DRILL HOLE (TYPICAL)
SIDE STAINLESS STEEL REINFORCING PIN 5mm DIAMETER
MIN. LENGTH: 200mm
MIN. 150mm INTO BLOCKS &
MIN. 50mm INTO END WALLS
KAOWOOL FIRE RATED EXPANSION MATERIAL